English / Englisch

Spare Parts

for the three disc sanding machine

TRIO

Lägler®
www.laegler.com

00.900.20.802 01.01.2020

Copyright © Eugen Lägler GmbH, 2020 – All rights reserved. Subject to changes.

ATTENTION!

In order to receive the correct spare parts from us, please specify in inquiries and spare part orders always the serial numbers of your machines!

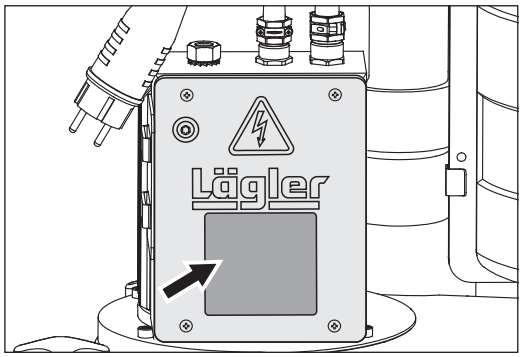

Fig. 1 Type plate on switch box of motor.

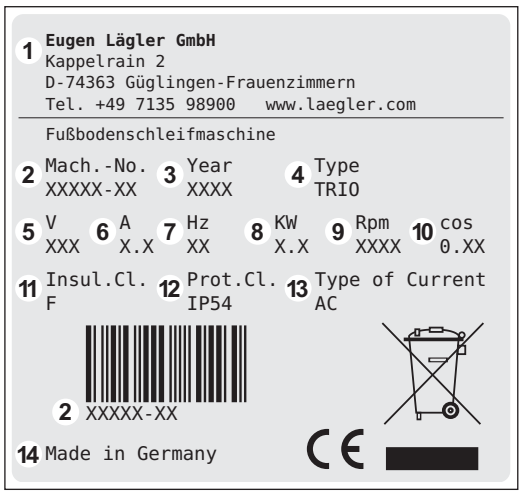

Fig. 2 Data on type plate.

The type plate of TRIO is located on the switch box of motor (fig. 1). The following technical data are specified on the type plate (fig. 2):

1 Manufacturer

2 **Serial number of machine (Mach.-No.)**

3 Year of manufacture (Year)

4 Machine name (Type)

5 Required mains voltage in volt (V)

6 Current consumption in ampere (A)

7 Motor frequency in CPS (Hz)

8 Motor power in kilowatt (KW)

9 Motor speed in 1/min (Rpm)

10 Power factor cosine phi (cos)

11 Insulation class (Insul. Cl.)

12 Protection class (Prot. Cl.)

13 Type of current

14 Country of manufacture

ATTENTION: Please specify in inquiries and spare part orders always the serial numbers of your machines!

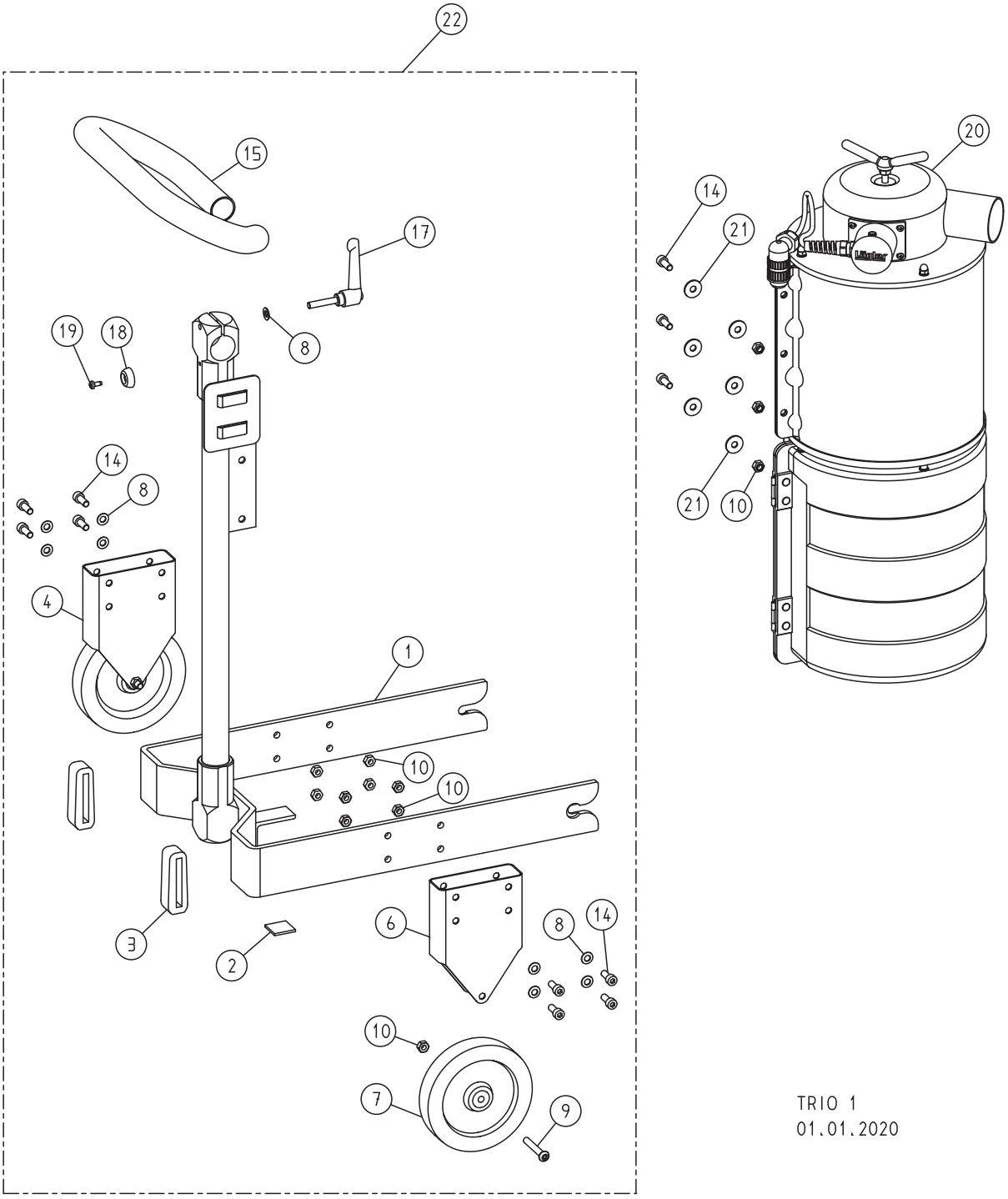

Item	Part number	Description
1	900.70.05.100	Frame, complete
2	900.70.25.105	Bumper felt
3	900.70.80.105	Protective rubber
4	900.70.36.100	Wheel, complete
6	900.70.34.100	Wheel holder
7	900.70.32.205	Wheel
8	0125.1008.000	Washer
9	7380.1008.055	Screw
10	0980.1008.000	Nut
14	0912.1008.020	Screw
15	900.70.70.300	Handle
17	000.20.40.081	Clamping device
18	900.70.52.105	Rubber buffer
19	7500.1005.012	Screw
20	900.00.16.100	Dust separator, complete
21	9021.0208.000	Washer
22	900.70.00.100	Chassis, complete

ATTENTION: Please specify in inquiries and spare part orders always the serial numbers of your machines!

SPARE PARTS TRIO

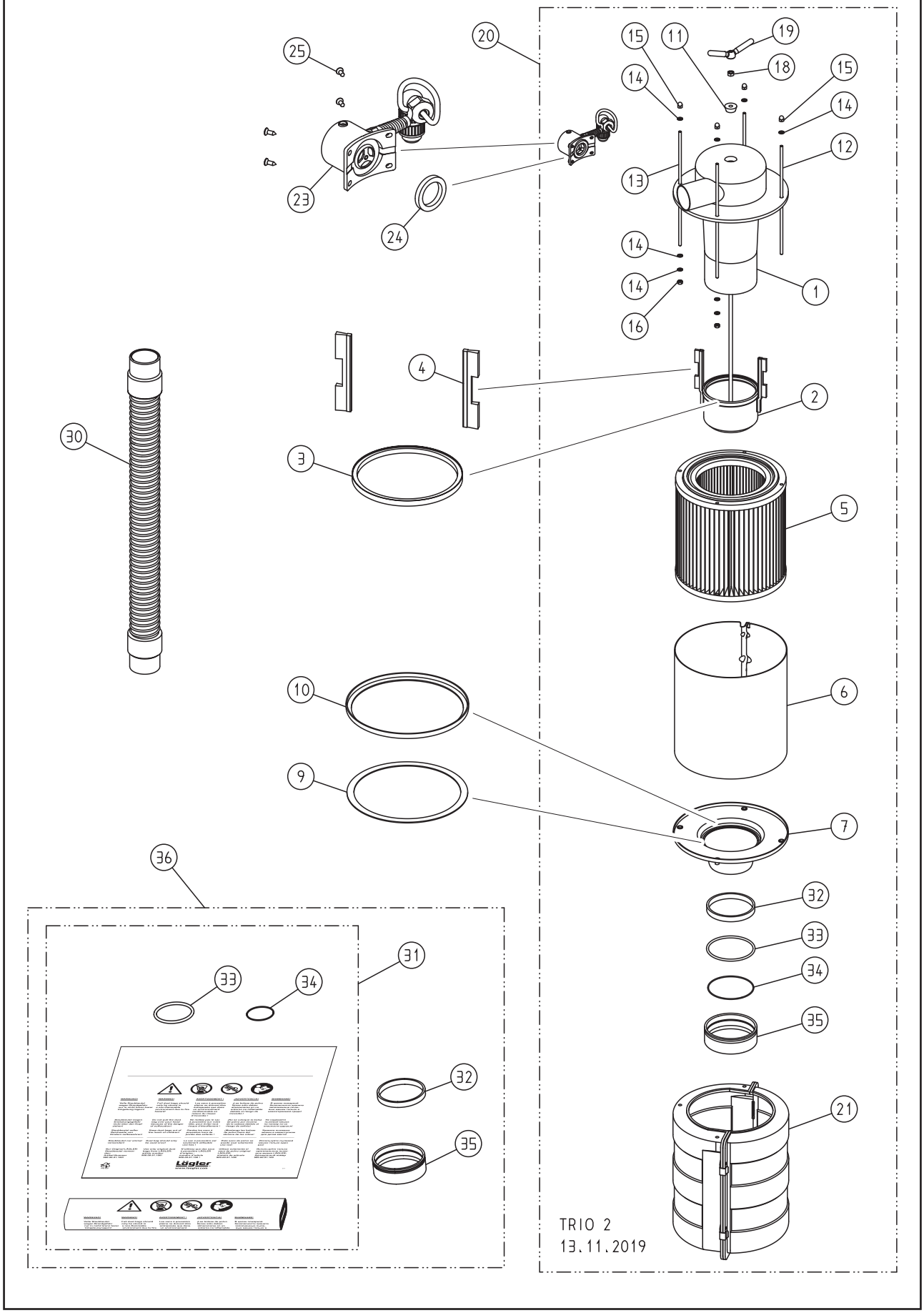

ATTENTION: Please specify in inquiries and spare part orders always the serial numbers of your machines!

Item	Part number	Description
1	900.16.10.100	Separator upper part
2	900.16.21.100	Opener, complete
3	900.16.23.100	Sealing brush
4	900.16.45.105	Filter brush
5	900.16.18.105	Filter cartridge
6	900.16.19.100	Protective cover
7	900.16.17.100	Cover lower separator, complete
9	900.16.25.105	Sealing
10	900.16.22.100	Ring
11	900.03.30.105	Rubber plug with hole
12	900.16.27.105	Screw, short
13	900.16.26.105	Screw, long
14	0125.1006.000	Washer
15	1587.1006.000	Cap nut
16	0980.1006.000	Nut
18	0934.1008.000	Nut
19	000.20.45.083	Wing nut
20	900.00.16.100	Dust separator, complete
21	900.17.00.200	Dust bag box, complete
23	900.15.00.100	Pressure control sensor, complete
24	900.15.40.100	Sealing washer
25	7983.1042.013	Screw
30	900.14.00.105	Hose
31	900.00.91.100	50 Dust bags TRIO with 2 O-rings
32	900.16.51.100	Spacer ring (plastics)
33	000.11.80.901	O-ring (Ø 80 mm)
34	000.11.59.901	O-ring (Ø 59 mm)
35	900.16.52.100	Fixing ring (aluminium)
36	900.00.90.100	Conversion kit TRIO dust bag

ATTENTION: Please specify in inquiries and spare part orders always the serial numbers of your machines!

ATTENTION: Please specify in inquiries and spare part orders always the serial numbers of your machines!

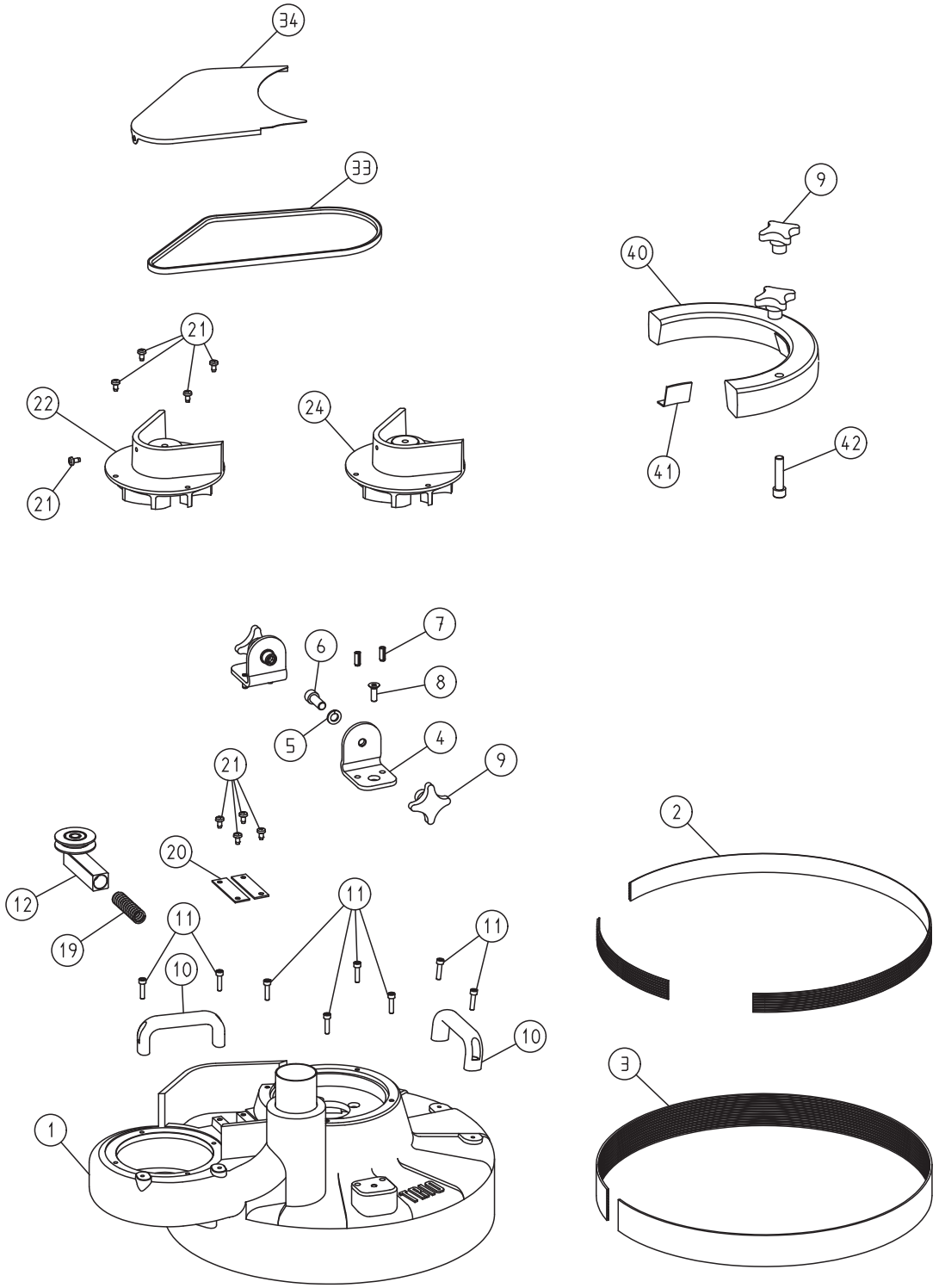

TRIO 3
31.10.2002

Item	Part number	Description
1	900.01.10.200	Machine housing
2	900.01.42.100	Self-adhesive Velcro negative
3	900.01.50.100	Velcro seal
	900.01.50.105	Velcro seal TRIO by the roll (50 m)
4	900.01.60.100	Angle
5	0127.1012.000	Spring washer
6	0912.1012.030	Screw
7	1481.0008.020	Spring type straight pin
8	7991.1008.025	Screw
9	000.20.20.121	Cross grip
10	000.20.10.121	Handle
11	0912.1006.025	Screw
12	900.58.00.200	Belt tensioner, complete
19	000.31.20.091	Pressure spring
20	900.01.20.200	Guide plate
21	7500.1006.012	Screw
22	900.10.00.200	Fan insert complete, European version
24	902.10.00.200	Fan insert complete, American version
33	000.70.10.087	V-belt
34	900.50.10.100	Belt guard
40	900.80.00.100	Additional weight, complete
41	900.80.21.105	Felt
42	0912.1012.050	Screw

ATTENTION: Please specify in inquiries and spare part orders always the serial numbers of your machines!

SPARE PARTS TRIO

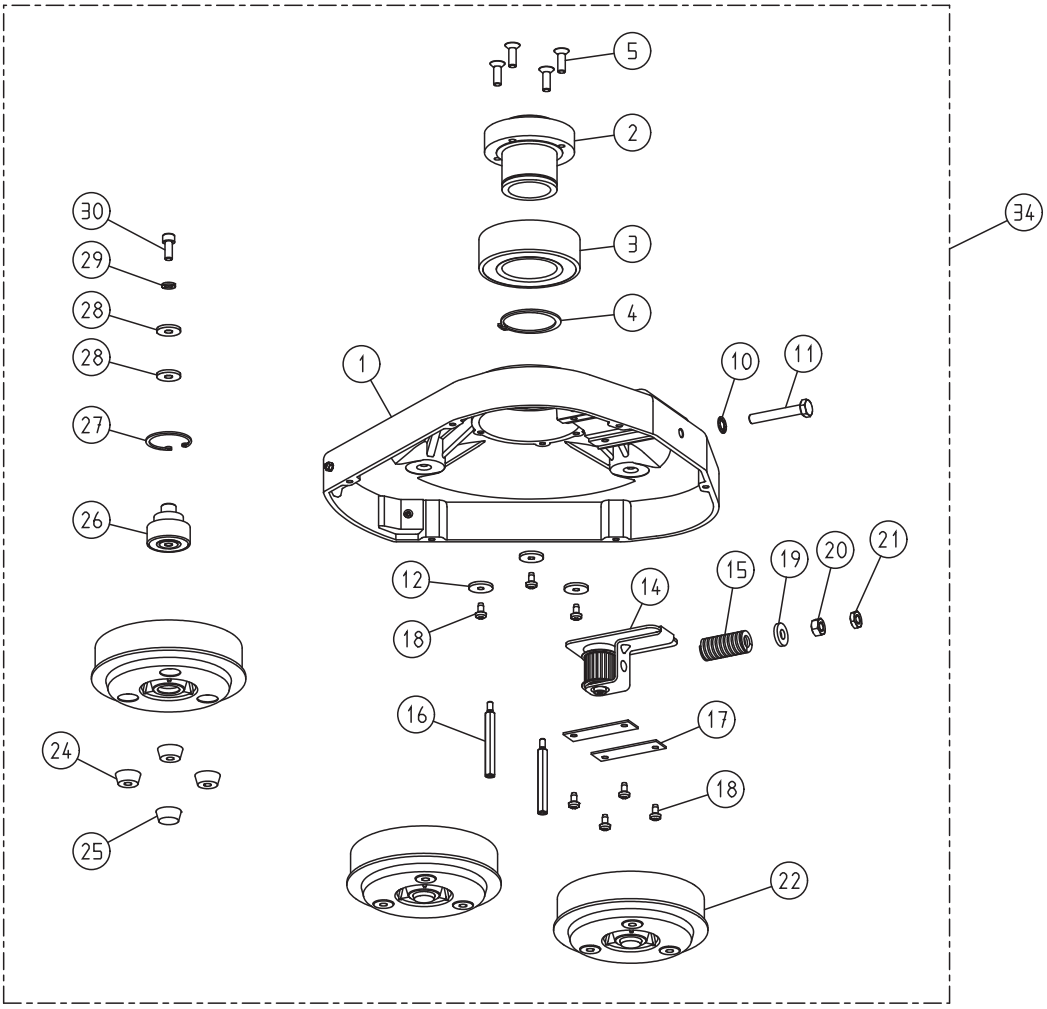

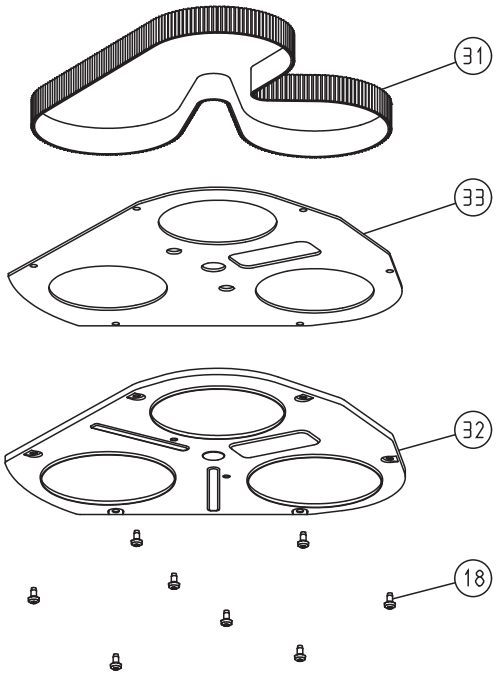

TRIO 4
01.04.2014

ATTENTION: Please specify in inquiries and spare part orders always the serial numbers of your machines!

Item	Part number	Description
1	900.07.10.200	Inner housing
2	900.07.20.100	Pick up
3	3212.0060.202	Ball bearing
4	0471.0060.000	Circlip
5	7991.1008.025	Screw
10	6797.1010.000	Washer
11	0933.1010.065	Screw
12	000.10.10.061	Washer
14	900.67.00.200	Tooth belt tensioner, complete
15	000.31.25.061	Pressure spring
16	900.07.42.205	Bolt
17	900.01.20.200	Guide plate
18	7500.1006.012	Screw
19	7349.1010.000	Washer
20	0934.1010.000	Nut
21	0439.1010.000	Nut
22	900.03.00.100	Pulley, complete
24	900.03.30.105	Rubber plug with hole
25	900.03.35.105	Rubber plug without hole
26	900.03.10.100	Axle pulley, complete
27	0472.0047.000	Circlip
28	000.10.10.081	Washer
29	0127.1008.000	Spring washer
30	0912.1008.020	Screw
31	000.75.28.152	Tooth belt
32	900.07.32.100	Cover complete
33	900.07.31.105	Sealing felt
34	900.07.00.100	Inner housing, complete

ATTENTION: Please specify in inquiries and spare part orders always the serial numbers of your machines!

SPARE PARTS TRIO

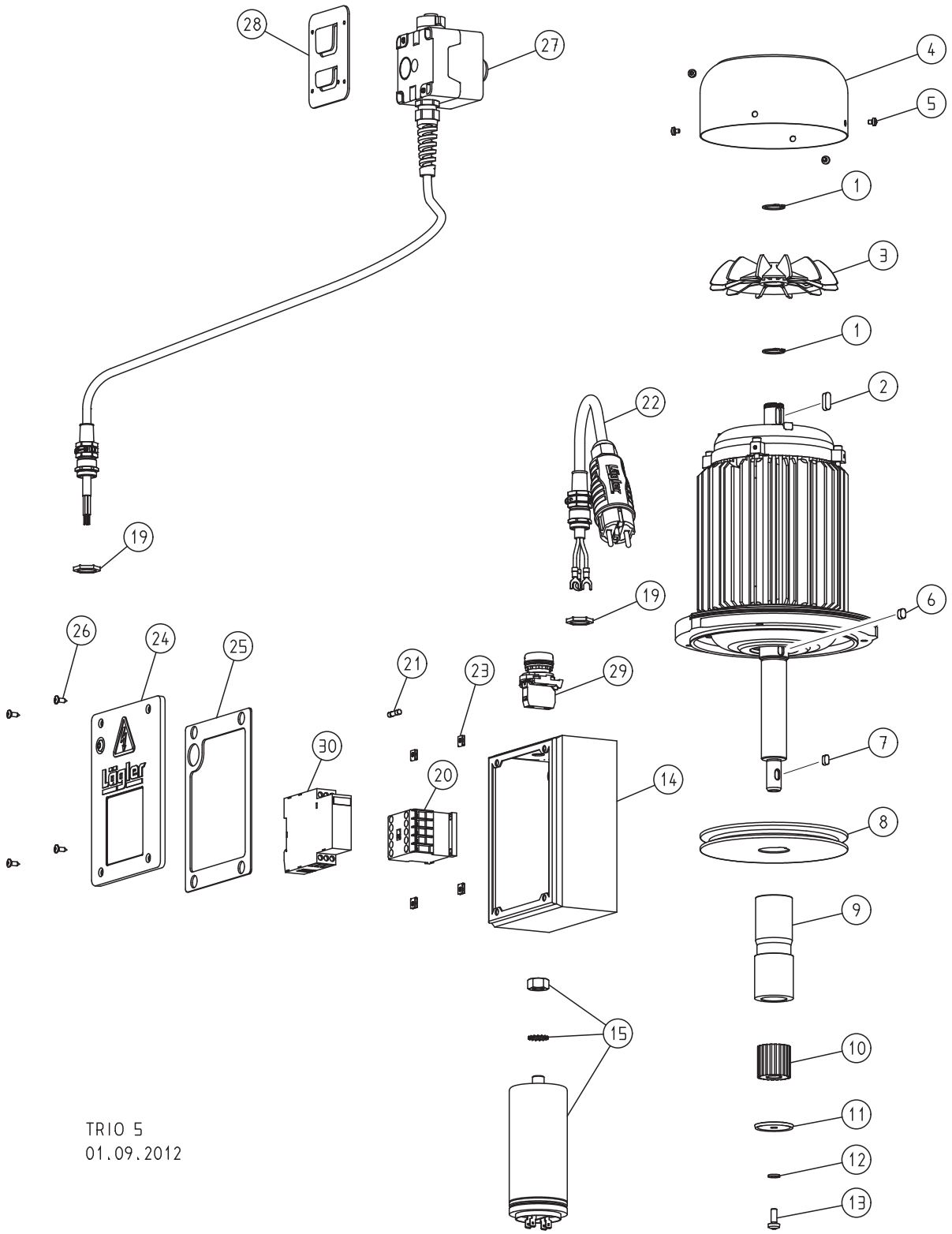

ATTENTION: Please specify in inquiries and spare part orders always the serial numbers of your machines!

Item	Part number	Description
	900.65.00.100	Motor, 230 V / 50 CPS / 1.8 kW
	901.65.00.100	Motor, 230 V / 60 CPS / 1.8 kW
	902.65.00.100	Motor, 220 V / 60 CPS / 1.8 kW, USA
	905.65.00.100	Motor, 400 V / 50 CPS / 2.2 kW, three-phase current
1	0471.0020.000	Circlip
2	6885.0606.018	Parallel key
3	900.65.08.100	Fan blade
4	900.65.09.100	Fan cover
5	7985.1004.805	Screw
6	6885.0606.010	Parallel key
7	6885.0505.010	Parallel key
8	900.65.06.100	Motor pulley
9	900.65.43.200	Spacer sleeve
10	900.65.41.105	Pinion
11	900.65.42.100	Washer
12	0127.1006.000	Spring washer
13	7985.1006.816	Screw
14	900.65.40.200	Switch box
15	000.65.10.041	Running capacitor 40 µF
19	000.68.60.207	Nut (from year of manufacture 2008)
	000.68.60.163	Nut (up to year of manufacture 2007)
20	000.65.20.012	Contactor
	000.65.20.015	Contactor for three-phase AC motor
21	000.65.80.061	Fuse, 6.3 A
22	100.65.75.100	Motor cable 3 x 2.5 mm² (from year of manufacture 2008)
	000.65.43.251	Motor cable 3 x 2.5 mm² (up to year of manufacture 2007)
	102.65.75.100	Motor cable 3 x 2.5 mm², USA (from year of manufacture 2008)
	000.65.43.257	Motor cable 3 x 2.5 mm², USA (up to year of manufacture 2007)
	105.65.75.100	Motor cable 5 x 1.5 mm² for three-phase AC motor (from year of manufacture 2008)
	000.65.45.151	Motor cable 5 x 1.5 mm² for three-phase AC motor (up to year of manufacture 2007)
23	000.50.10.110	Clip nut
24	900.65.47.100	Cover with seal
25	465.65.48.105	Cover seal
26	7983.1042.013	Screw
27	900.65.60.200	Switch, complete (from year of manufacture 2008)
	900.65.60.100	Switch, complete (up to year of manufacture 2007)
28	900.65.55.200	Bracket
29	000.65.25.020	Lamp red for three-phase AC motor
30	000.65.20.220	Relay for three-phase AC motor

ATTENTION: Please specify in inquiries and spare part orders always the serial numbers of your machines!

SPARE PARTS TRIO

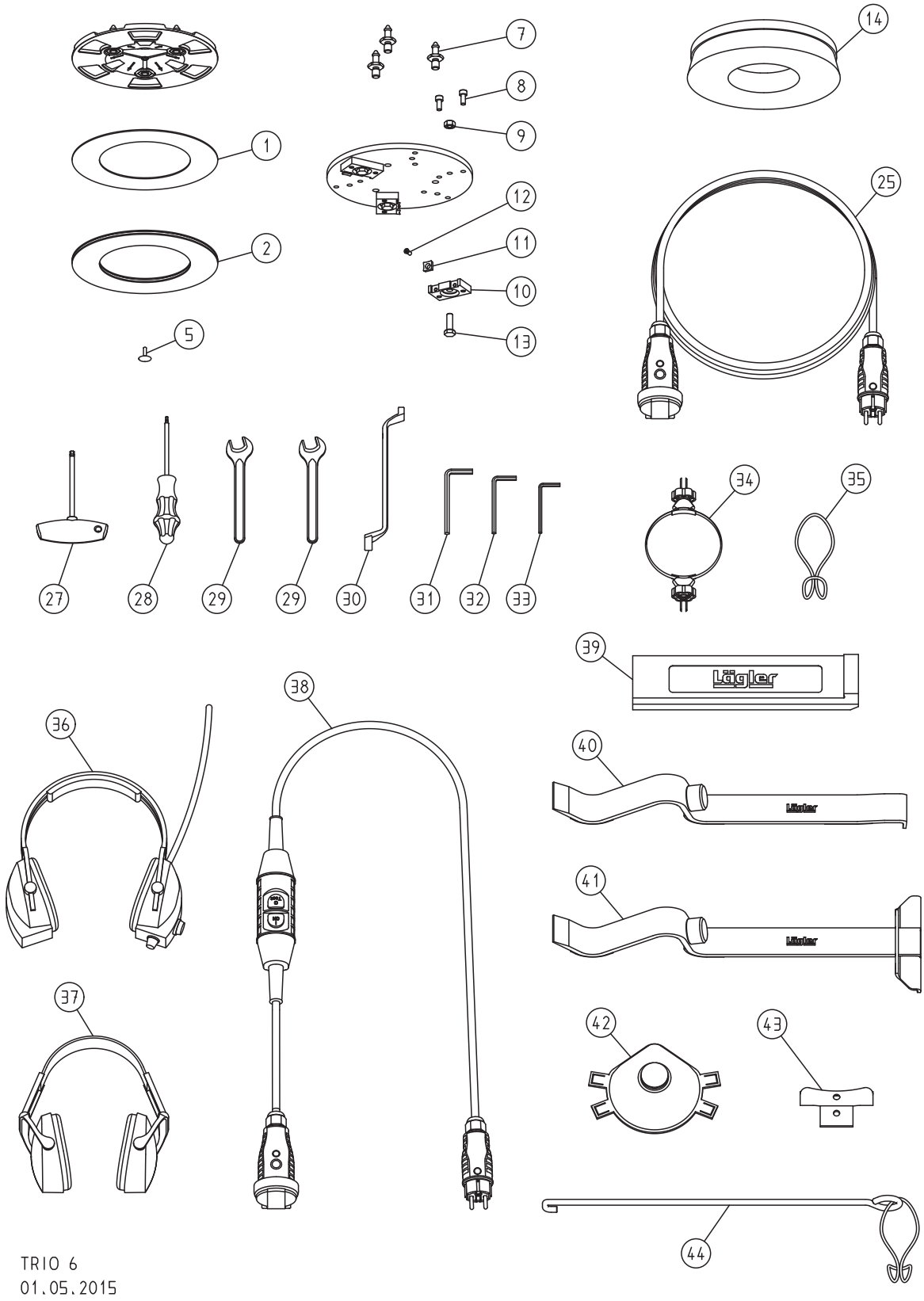

ATTENTION: Please specify in inquiries and spare part orders always the serial numbers of your machines!

Item	Part number	Description
	900.02.10.200	Sanding plate, complete
1	900.02.12.305	Velcro ring 200 mm
2	900.02.13.205	Velcro ring flexible 200/125 mm diameter
5	900.02.23.205	Plastic pin
	900.02.40.100	Milling disc TRIO, complete
7	900.02.42.105	Fastening bolt
8	0912.1006.014	Screw
9	0934.1008.000	Nut
10	900.02.43.100	Holder for indexable inserts
11	900.02.45.105	Carbide indexable insert (10 pieces per package)
12	900.02.47.105	Screw for indexable insert
13	900.02.49.105	Special screw
14	900.02.30.105	Brushing disc TRIO with bristles
	900.02.60.100	Brushing disc TRIO with nylon bristles
	900.02.70.100	Brushing disc TRIO with brass bristles
	900.02.80.100	Brushing disc TRIO with stainless steel bristles
25	000.65.53.251	Extension cable 3 x 2.5 mm², 10 m long
	000.65.53.252	Extension cable 3 x 2.5 mm², 20 m long
	000.65.55.151	Extension cable 5 x 1.5 mm², 10 m long, for three-phase AC motor
27	000.91.40.301	Torx screwdriver T30
28	000.91.30.151	Torx screwdriver T15
29	000.95.11.171	Open mouth wrench 17 mm
30	000.95.21.103	Closed mouth wrench 10/13 mm
31	000.93.11.061	Hexagonal socket screw wrench 6 mm
32	000.93.11.051	Hexagonal socket screw wrench 5 mm
33	000.93.11.041	Hexagonal socket screw wrench 4 mm
34	000.01.40.112	MultiClip TRIO
35	00.000.41.002	Strain relief ring
36	000.01.10.011	Foldable earmuff type MUSIMUFF with FM radio
37	000.01.10.021	Foldable earmuff type POCKET
38	000.01.65.020	Safety switch PRCD-S (for German mains supply)
39	701.10.00.100	Impact tool
40	702.00.00.200	Parquet layer tool ZUGEISEN, small
41	703.00.00.200	Parquet layer tool ZUGEISEN, broad
42	000.01.20.010	Respiratory protection mask P3
43	900.70.56.100	Cable support bracket
44	100.20.26.100	Cable support, complete

ATTENTION: Please specify in inquiries and spare part orders always the serial numbers of your machines!